Company :	SERVOLUX SIA	Date :	2014.02.11.
To :		From :	A.Grava
Subject :			
Reference :		Page :	1 / 3

Model : **HRglobal 4000 TAC4 / NVr / MS / CTm / MS / MS / CTm / MS**

26,4 kg 504,3 kg 26,4 kg

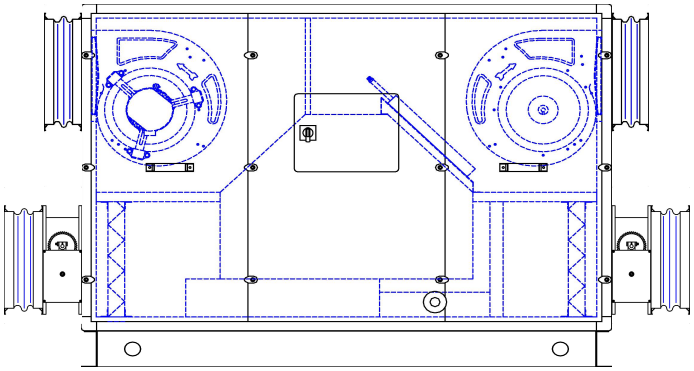

280 mm 1590 mm 280 mm

Outlet exhaust air / Inlet supply air

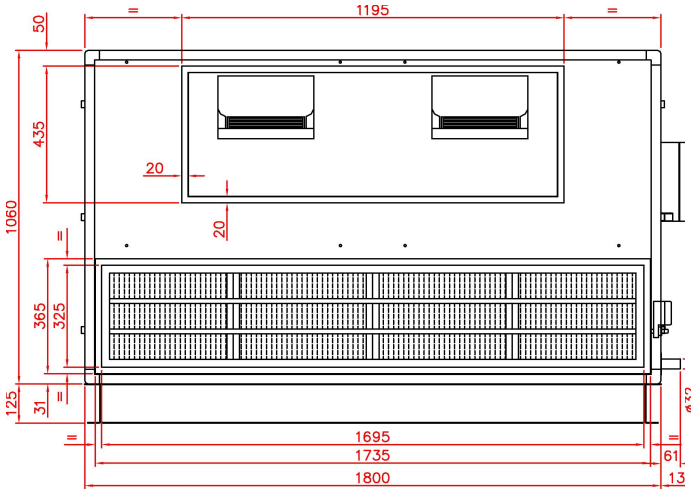

Outlet supply air / Inlet exhaust air

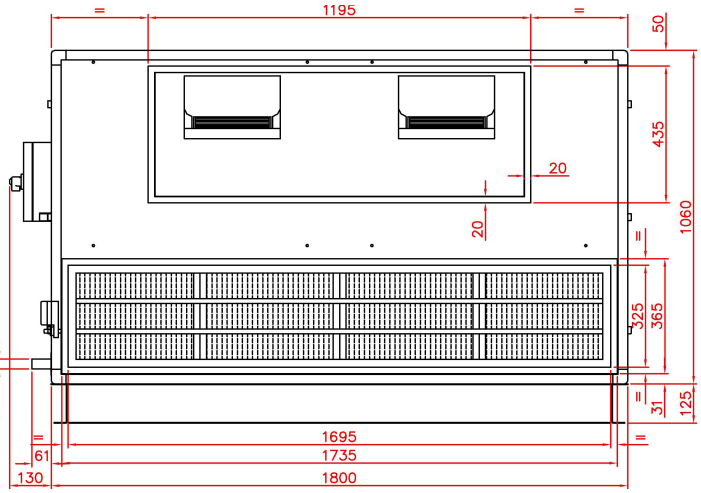

The HRglobal series is a range of of mechanical home ventilation units (up to 6000 m3/h) with high efficiency (90 % and more) heat recovery, consisting of aluminium counterflow heat exchangers, a stainless steel drain pan, G4 and F7 class filters and of TAC technology centrifugal fans with high efficiency electronic motors. It will be delivered ready to use, entirely pre-cabled (the options as well) and with a remote control which will allow to control the unit without opening it. All that'll need to be done is to connect the power (outside the unit), to connect the remote control and to set the parameters and that's it ! The device will be delivered as standard with a 100% by-pass, and its pre-cabled control. The new control is designed to receive and monitor the different options available according to your needs. The structure of the unit is in extruded anodized aluminium profile, articulated around strengthened polypropylene modules. Panels are 30 mm double skin. The outside is made of polyester pre-painted steel, and the inside is made of galvanized steel. The heat and sound insulation is made of 28mm fireproofed EPS panels, in conformity with the European standards for the environment. The HRglobal series is mounted on base frame, and is made in one piece (mono block). All the access doors to the fans and filters are equipped with handles. Airtightness of the group allows to classify the device in class 1 for the internal leaks and class 2 for the external leaks according to standard EN 13141-7. A unit with the same characteristics can be offered with all airflow connections oriented upwards. The HRup solution can solve many space availability problems, up to 2000 m3/h. In case of limited height, we can also offer the HRflat range, up to 2000 m3/h as well.

Technical data HRglobal

TAC Technology

Company :	SERVOLUX SIA	Date :	2014.02.11.
To :		From :	A.Grava
Subject :			
Reference :		Page :	2 / 3

Model : **HRglobal 4000 TAC4 / NVr / MS / CTm / MS / MS / CTm / MS**

Supply : Fans + Regulation

Voltage : 3 x 400 V + N
Intensity : 18,0 A max.
Electrical protection : D20A - 10kA - AC3

Fans - TAC

Units are equipped with high efficiency TAC technology fans. They are driven by electronically commutated motors and allow accurate control of the fan's actual working point. The efficiency of the motor remains between 85% and 60%, whatever the working point. The motor is a permanent magnet DC driven motor but AC power supplied.

	Supply	Exhaust	
Airflow :	3156	3156	m³/h
Internal pressure drop :	185	200	Pa
External pressure drop :	430	430	Pa
Extra available pressure drop :	138	123	Pa
Rotation speed :	1470	1486	rpm
Voltage :	230	230	V
Intensity :	7,96	8,14	A
Power :	1336	1368	W

Fan name : DD 11-9 TAC 3/4 HRg4000
Number of fans : 2 + 2

Sound power spectrum (fan only)-(dB re.10E-12 W/m²)

	63	*125*	*250*	*500*	*1000*	*2000*	*4000*	*8000*	*Hz*
S	93,5	88,5	83,5	76,5	78,5	71,5	66,5	61,5	dBL
E	93,7	88,7	83,7	76,7	78,7	71,7	66,7	61,7	dBL

Radiated A weighted Sound pressure level for ducted unit in free field (d=3m) 50,7 dBA

(RF=600000000/DF=1/ZF=20,40)-(dB re. 20 µPa)

Regulation

The units are delivered fully pre-wired as standard ('plug & play') with general switch and complete regulation of the unit. The latter includes all the necessary components and is fully wired to T° probes, fans, general switch, by-pass , as well as all options such as pre and post heating, dampers. Connect the power supply and configure the parameters and the unit is ready to run.
The regulation monitors each component:
•Setting and piloting of TAC fans in selected mode: CA (constant flow), CP (constant pressure) or LS (link with signal 0 - 10V, for example a CO2 air quality sensor).
•Automatic freecooling control with bypass
•Antifrost system of the air/air heat echanger (airflow modulation or electrical coil)
•Control of internal post-heating coil (water or electrical)
•Control of external post-heating coil (water or electrical) or cooling coil (water), or reversible coil (heating or cooling water coil)
•Open/Close motorized dampers
•Time slot management (scheduling)
•Alarms management (fire, pressure, maintenance, component failure,…)
•Display and management of all system parameters via RC, GRC, BMS or web page (option)
•MODBUS communication (RTU, TCP/IP and GPRS) (option)

Heat Recovery unit - CF

The heat exchanger is an air/air high efficiency counterflow heat exchanger, executed in sea water resistant aluminium, at a temperature of up to 80°C. The airtightness tests according to DIN1946 show a leakage rate of 0.017 % at 400 Pa difference between the 2 air streams. The heat exchanger is compliant to standard EN 308.

Air pressure : 1013 mbar

	Supply	Exhaust			Supply	Exhaust	
Airflow :	3156	3156	m³/h	Air outlet temperature :	18,2	-6,3	°C
	0,88	0,88	m³/s	Relative humidity out :	2,2	100,0	%
Airspeed through HRU :	1,46	1,73	m/s	Humidity out :	0,3	2,2	g/kg
Air inlet temperature :	-23,0	22,0	°C	Total capacity (W.B.) :	43,6		kW
Relative humidity in :	60,0	45,0	%	HRU efficiency (W.B.) :	91,5		%
Humidity in :	0,3	7,4	g/kg	Pressure drop in REC :	122	170	Pa

Filter - G/F

The heat recovery ventilation unit is equipped with G4 zig-zag filters at the inlet of the polluted air and filters F7 class filters at inlet of the fresh air, to protect the heat exchanger and guarantee an air quality inside the building. They are easily accessible for maintenance by the access doors equipped with handles.

					Supply	Exhaust	
Filter class :	F7 (Compact)	Dimensions :	436 x 370 x 50 mm	Air speed :	1,36		m/s
		Quantity :	4	Filter pressure drop :	59		Pa
Filter class :	G4 (Plane Z)	Dimensions :	436 x 370 x 50 mm	Air speed :		1,36	m/s
		Quantity :	4	Filter pressure drop :		25	Pa

Company :	SERVOLUX SIA	Date :	2014.02.11.
To :		From :	A.Grava
Subject :			
Reference :		Page :	3 / 3

Model : **HRglobal 4000 TAC4 / NVr / MS / CTm / MS / MS / CTm / MS**

Damper(s) - CTm

It 's a damper delivered motorized and pre-wired, to cut the draft during the powering off of the device. It comes with a pre-wired servo motor and is controlled by the regulation. The frame and the aerofoil blades are in galvanised steel, the bearings are in nylon. The external gears, in plastic material, allow a transmission without looseness or deformation.

			Supply	Exhaust	
External dimensions :	365 x 1735 mm	Air speed :	1,86	1,86	m/s
Internal dimensions :	285 x 1655 mm	Damper pressure drop :	5	5	Pa

Base frame - BA

Flexible connection (air in) - MS

Flexible connection (air out) - MS